DOWNLOAD MULTILINGUAL USER MANUAL

code.ironbaltic.com/u/d7opfmq2

REAR A-ARM GUARDS (ALUMINIUM)

YAMAHA

GRIZZLY 550 / 700

Code 02.715VP

Version 22102023

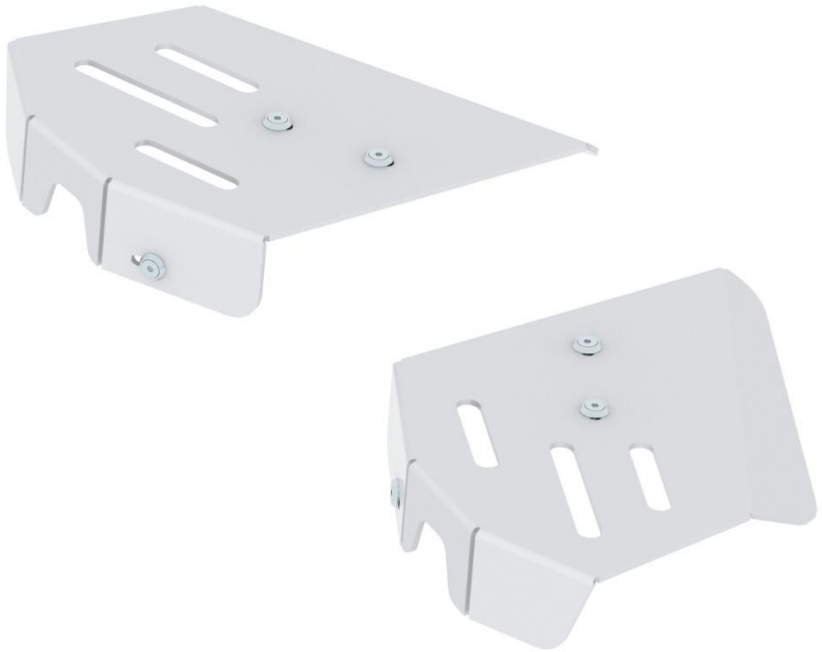

Keep this manual for future reference!

If you need any spare parts, please send this packaging data to your local dealer or to Iron Baltic sales@ironbaltic.com

SPECIFICATION

Pos.	Description	Code	Amount
1	Rear right arm protection	02.715	1
2	Rear left arm protection	02.716	1
3	Mounting bracket	02.719	2
4	Conical washer	14.502	6
5	Bolt M6x20 DIN 7991	OT.02.04.030	8
6	Washer ∅6/15 SFS 3738	OT.04.03.020	12
7	Nut M6 Nyloc DIN 985	OT.03.02.030	6

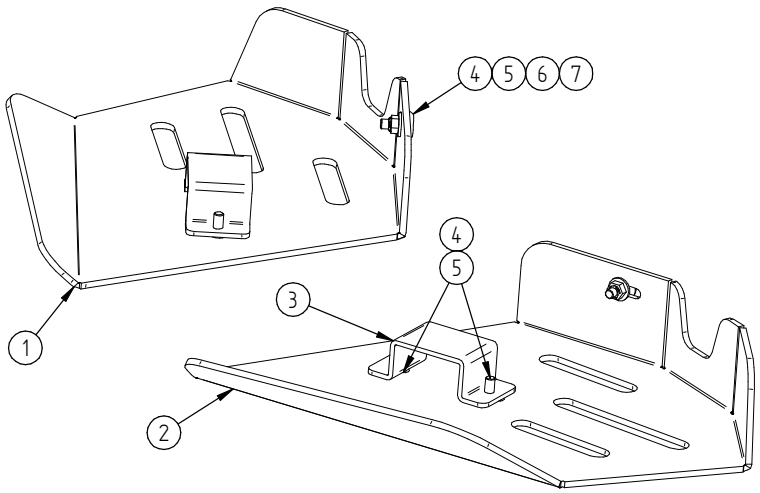

The numbers in the figure correspond to the Pos numbers in the specification table.

Thread size	Strength class		
	4.8	8.8 (default)	10.9
	Tightening torque (Nm)		
M6	5,5	10	15
M8	13	25	35
M10	25	50	75
M12	45	85	130
M16	115	215	315

TOOLS REQUIRED FOR INSTALLATION:

- Kuuskantvõti H4
- Lehtvõti 10 mm

NB!

We recommend using thread lock fluid on the bolts!
Bolts tend to loosen with vibration from ATV.

NB!

All pictures in this manual are for illustration purposes only and may differ from real product due to the changes made to the product during improvements!

FITTING INSTRUCTIONS

Step 1 Install rear A-arms protections, use brackets 02.719, bolts M6x20, washers ∅6/15 and nuts M6.

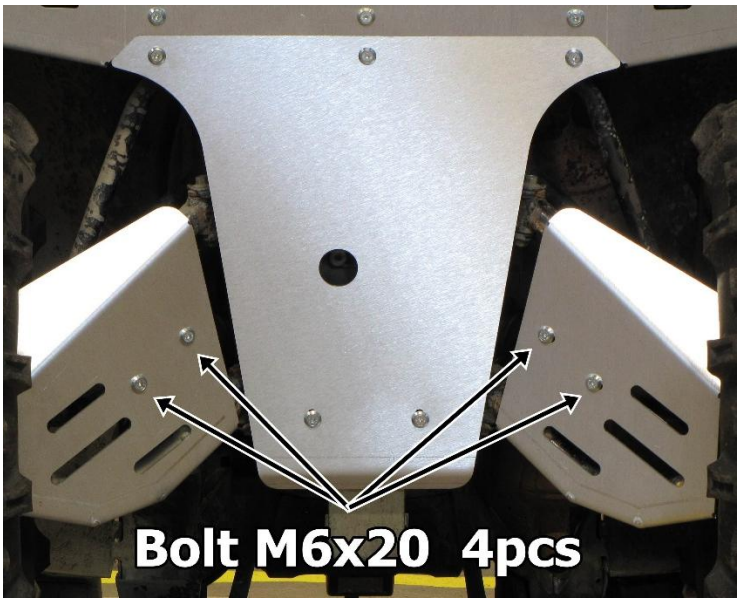

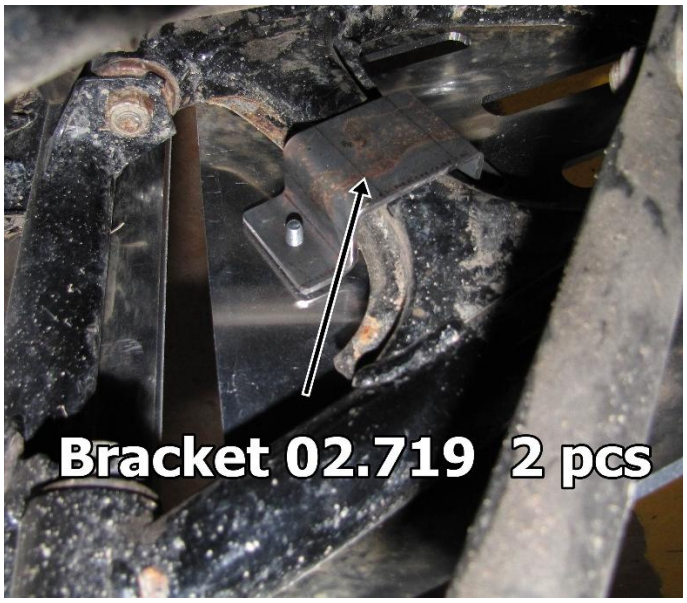

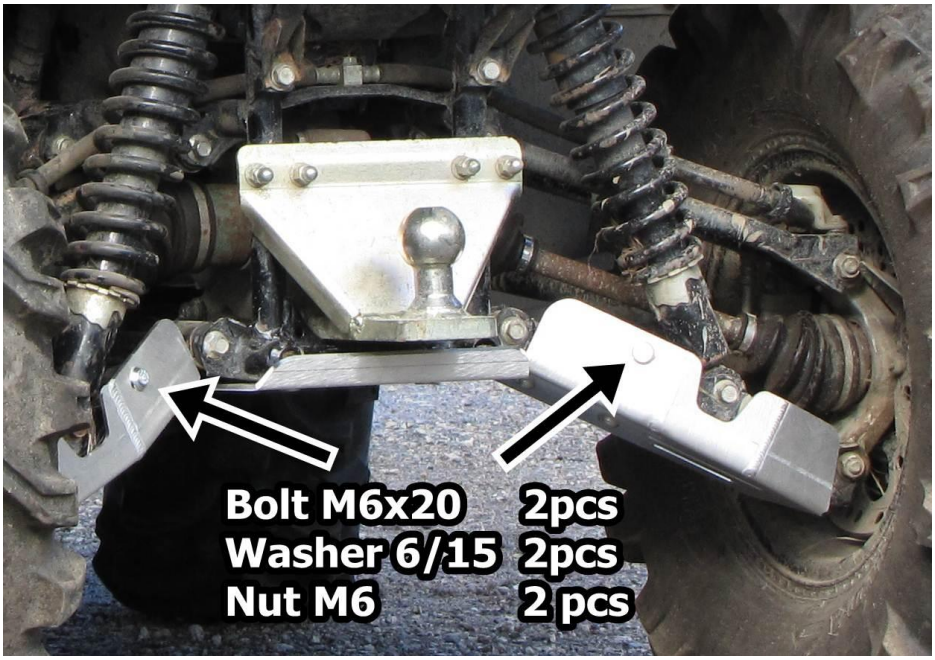

IRON BALTIC OÜ
Joa tee 17
Vääna 76903
Estonia / Europe

+372 6 533 711
sales@ironbaltic.com

www.ironbaltic.com
www.facebook.com/ironbaltic
www.youtube.com/user/ironbalticltd